Pendulum: Conservation of Energy

Main Topic	Motion
Subtopic	Periodic Motion
Learning Level	Middle
Technology Level	Low
Activity Type	Student

Description: Measure and compare a pendulum's potential energy at the top of its swing to its kinetic energy at the bottom.

Required Equipment	Workshop Stand, Pendulum, Bolt, String, Pinch Clamp, Meterstick, Photogate, Datalogger.
Optional Equipment	

Educational Objectives

- Evaluate conservation of energy in a simple pendulum.

Concept Overview

The Law of Conservation of Energy states that energy cannot be created or destroyed, but it can be transformed from one form to another. One type of energy is potential energy, which is stored energy. For example, an object is lifted to a height and has the potential to fall. Another type is kinetic energy, which is energy of motion. Mechanical systems also convert some energy to heat, through friction.

Students will measure the pendulum bob's potential energy at the top of its swing. Then, using a photogate, they will measure the bob's speed at the bottom of the swing and calculate its kinetic energy. They will compare the two energy values and evaluate conservation of energy for the system. Since the pendulum system has very little friction, there should be little loss.

Lab Tips

Assembly:

1. Push the attachment bolt through the top hole of the Workshop Stand.
2. Screw the bolt into the back of the Pendulum, so that the printed side faces out.
3. Use the pinch clamp to support the string, and attach one of the cylindrical bobs to the string. Adjust the pinch clamp to create the desired pendulum length.
4. Grid Board (for selected experiments): Push the attachment bolt through the Grid Board, then through the stand, at a height that accommodates the entire swing of the pendulum. Screw the nut onto the back to fasten.
5. Align the Pendulum Face and Grid Board by using the string as a plumb bob. Face the stand, close one eye, and turn the pieces as needed so that the vertical lines are aligned with the string. Adjust the stand leveling screws if necessary.

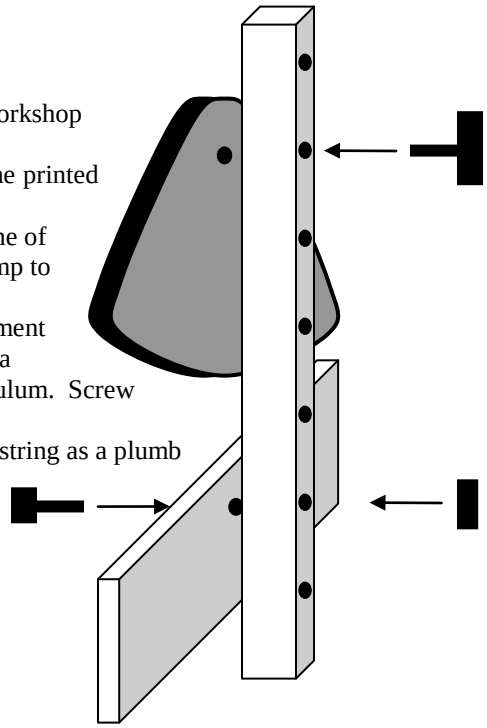

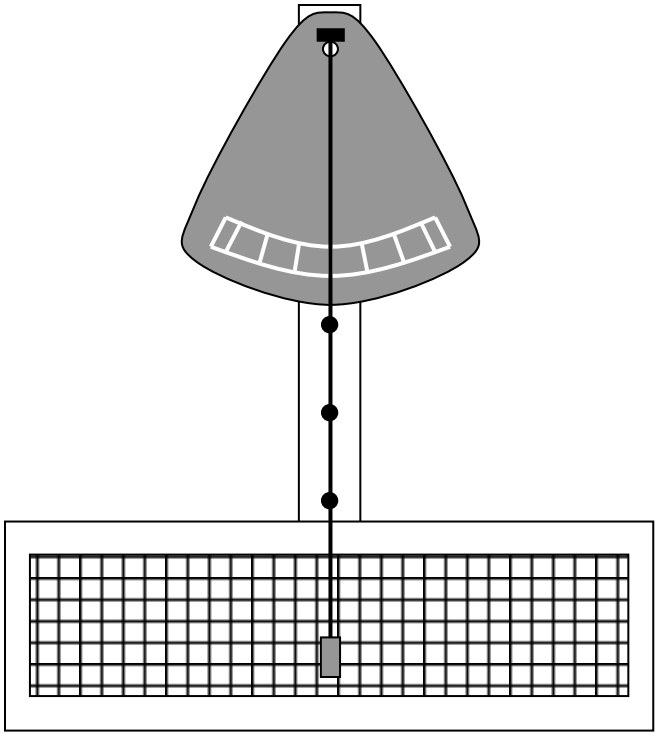

Pendulum: Conservation of Energy

Objective: To investigate the transformation and conservation of energy in a pendulum.

Materials: Workshop Stand, Pendulum, Bolt, String, Pinch Clamp, Meterstick, Stopwatch.

Background:

The Law of Conservation of Energy states that energy cannot be created or destroyed, but it can be transformed from one form to another. One type of energy is potential energy, which is stored energy. For example, an object is lifted to a height and has the potential to fall. Another type is kinetic energy, which is energy of motion. Mechanical systems also convert some energy to heat, through friction.

Procedure:

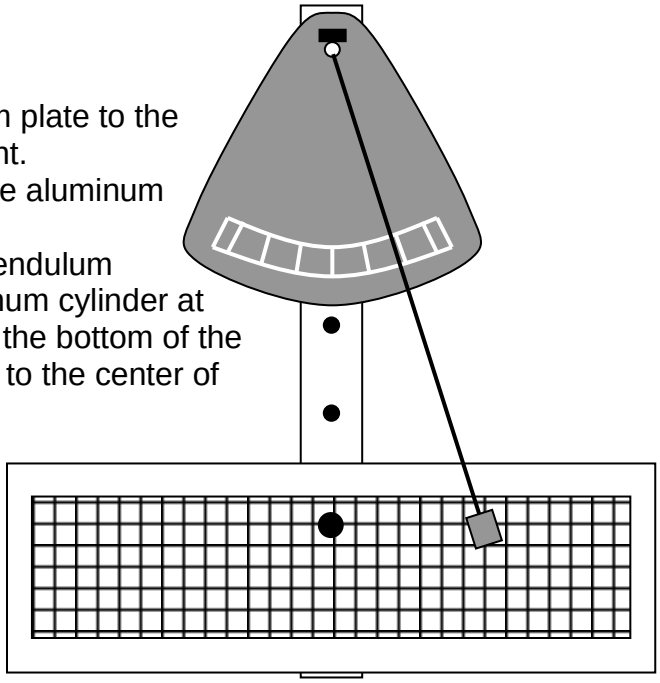

1. Use the bolt to attach the Pendulum plate to the Workshop Stand at the highest point.
2. Measure and record the mass of the aluminum cylinder. _____
3. Use the Pinch Clamp to create a pendulum that is 60cm long. Hang the aluminum cylinder at the end. (Measure the length from the bottom of the support, where the string will bend, to the center of the hanging cylinder.)
4. Stand directly in front of the Pendulum, close one eye, and make sure the “0” mark is aligned with the string as it hangs straight down. Turn the Pendulum plate as necessary.
5. To attach the grid board, push the attachment bolt through the board from the front, then through the stand, at a height that accommodates the entire swing of the pendulum. Screw the nut onto the back to fasten.
6. Align the board so that the vertical lines are parallel to the pendulum string.
7. Hold the aluminum bob out so that the string is lines up with the line marked 20. (20° away from the center.) Make a mark at the bottom center of the bob.
8. Release the pendulum and mark its position on the other side. Describe what you observe about the two heights.

Pendulum: Name: _____

Conservation of Energy Class: _____

_____

_____

9. With the pendulum hanging straight down, make a mark at the bottom. Measure and record the vertical distance between the upper and lower marks. (Each square is one centimeter.) _____
10. Convert #9 to a distance in meters. _____
11. Calculate the difference in the bob's potential energy from the top to the bottom of its swing. (g=9.8 m/s^2)

$$PE = mgh$$

12. How much kinetic energy should the bob have at the bottom of its swing? _____
13. Remove the grid board.
14. Position the photogate so that it is open toward the top and the bob is centered between the ends. (See diagram, right.) The bob should be able to swing freely back and forth through the photogate.
15. Set up the datalogger to measure the bob's velocity as it passes through the photogate.
16. Pull the bob out to 20° and release it. (Be sure to cleanly release it without pushing.) What is the bob's velocity? _____
17. Repeat the measurement 5 more times. Record and average the velocities.

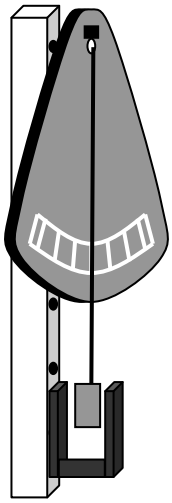

Avg. Velocity: _____

18. Calculate the bob's kinetic energy at the bottom of its swing.

$$KE = \frac{1}{2}mv^2$$

19. How does the experimental kinetic energy in #18 compare with the calculated value in #12? Explain any difference.